Venus's Y feature as a wind distorted wave

J. Peralta, A. Sánchez-Lavega, M.A. López-Valverde,
D. Luz and P. Machado

Estoril, 11 Sept. 2014

Venus's Y feature as a wind distorted wave

CC BY

What is the "Y" feature??

- It's a recurrent dark cloud structure with two arms symmetric relative to the equator and extending up to 30º latitude.
- It is apparent at the cloud tops of Venus in UV images.
- The "Y" propagates westwards and circles the planet every 4 days approx.
- Coherent: it must be a WAVE.

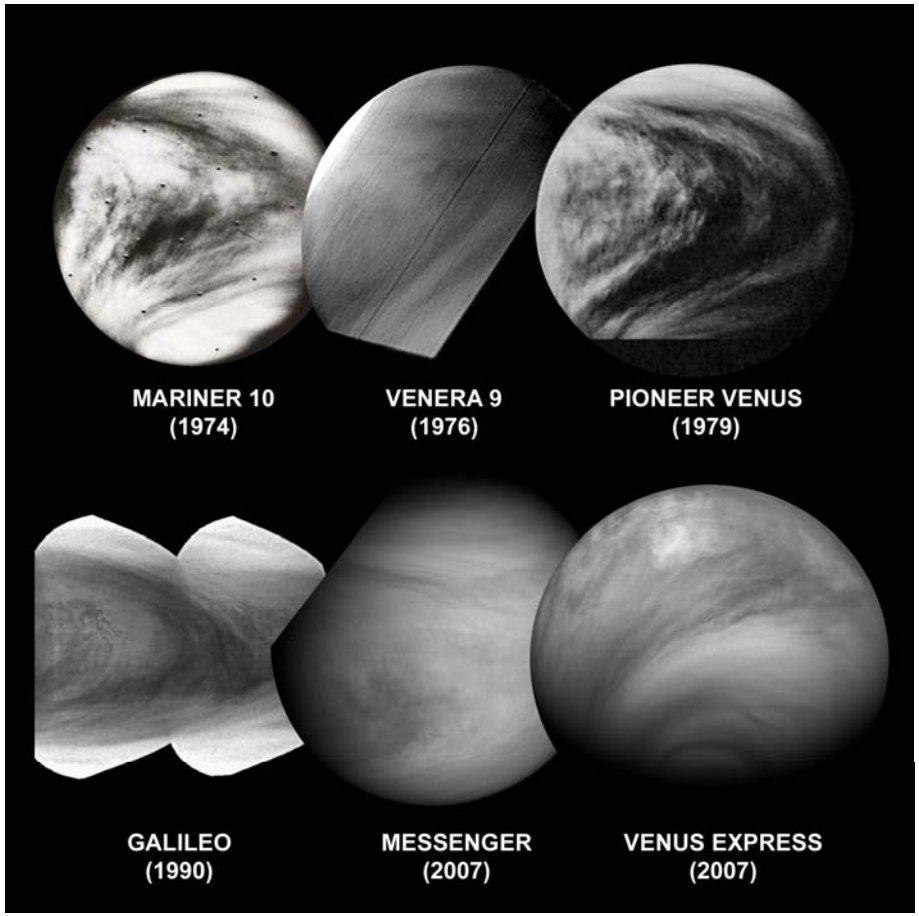

MAIN UNSOLVED ISSUES:

- Explain Morphology.
- Reason for dark material in UV.
- Explain Time Evolution.

Venus's Y feature as a wind distorted wave

CC BY

Incomplete Hypotheses about the "Y" shape

- The **superposition of 2 waves**: Kelvin wave at EQ (4-day mode) + Rossby at midLats (5-day). *[Belton et al. 1976; Yamamoto & Tanaka 1997]*

  PROBLEMS:
  - UNREALISTIC westward tilting at midLats.
  - DON'T FIT time evolution in observations.
  - INCORRECT dispersion relation for Rossby and Kelvin waves in cyclostrophic regimes.
  - 5-day mode in cloud brightness but PERIODOGRAMS vs LATITUDE NOT DONE FOR PV WINDS *[Del Genio & Rossow, 1990]*

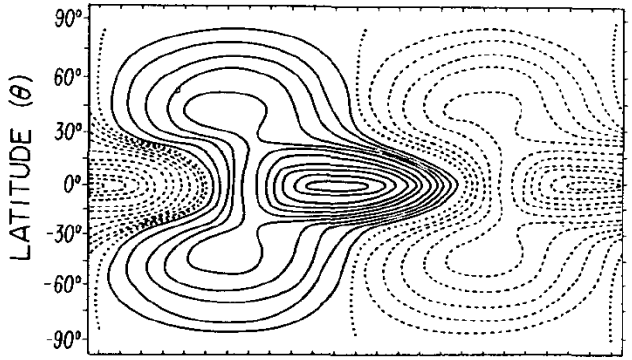

Rossby+Kelvin waves (Belton et al., 1976)

- A **single Kelvin wave modified by the winds**. *[Smith et al. 1992; Smith et al. 1993]*

  PROBLEMS:
  - Realistic streaks but NOT "Y" SHAPE.
  - MOST PROBLEMS from previous case.

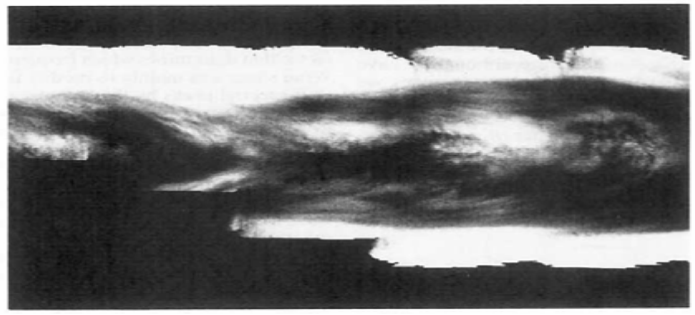

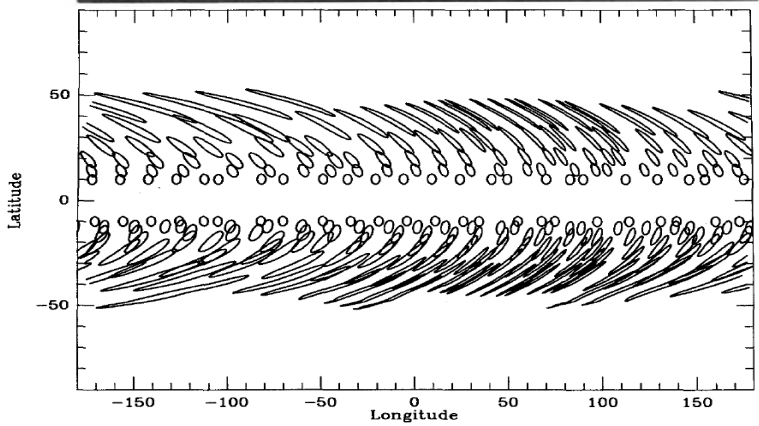

Venus's Y feature as a wind distorted wave

CC BY

Wave Solutions from Venus's Cyclostrophic conditions

Peralta et al. "Analytical Solution for Waves in Planets with Atmospheric Superrotation 1" *ApJS*, **213**, 17 (2014)
Peralta et al. "Analytical Solution for Waves in Planets with Atmospheric Superrotation 2" *ApJS*, **213**, 18 (2014)

Acoustic waves

$$\overline{\omega}^2 \approx \left(k^2 + m^2 + 1/4H_0^{\,2}\right)\cdot c_S^{\,2}$$

Inertia-gravity waves

$$\overline{\omega}^2 \approx \frac{gB\cdot k^2 + \xi^2\cdot\left(m^2 + 1/4H_0^{\,2}\right)}{k^2 + m^2 + 1/4H_0^{\,2}}$$

Lamb waves

$$\overline{\omega}^2 = \xi^2 + c_S^{\,2}k^2$$

Long Surface waves

$$\overline{\omega}^2 = \xi^2 + gH_0k^2\left(1 - e^{-h_0/H_0}\right)$$

Short Surface waves

$$\overline{\omega}^2 = gk$$

Centrifugal waves

$$\overline{\omega} = \frac{-2\beta\cdot k_x}{k_x^{\,2} + k_y^{\,2} + m^2\cdot\left(\dfrac{2\Psi^2}{gB}\right)}$$

Reference Atmosphere for 45-80 km combining data from VIRA and VEx.

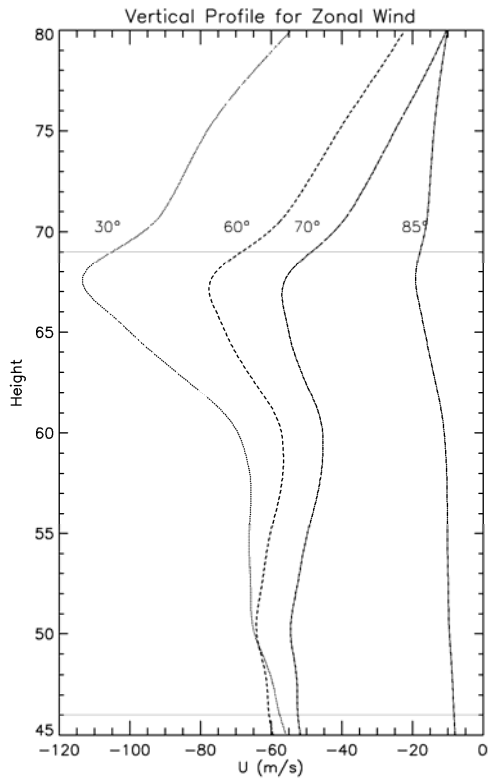

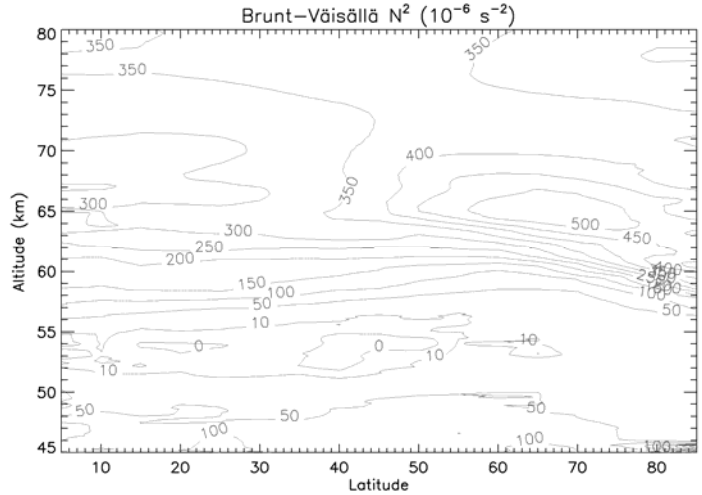

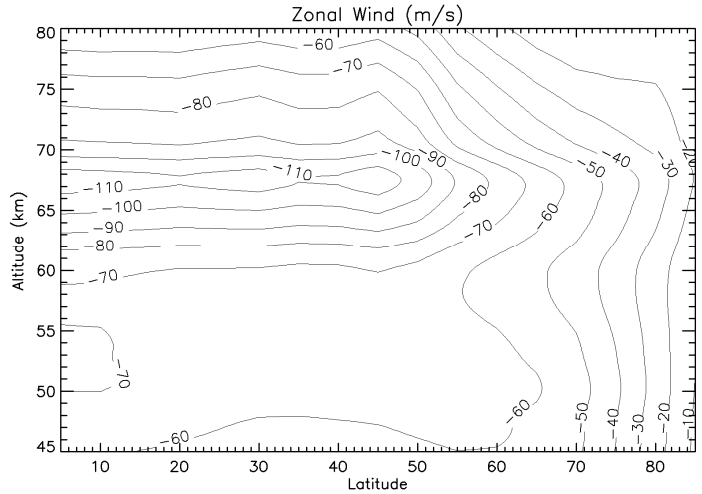

Venus's Y feature as a wind distorted wave

CC BY

Wave Solutions from Venus's Cyclostrophic conditions

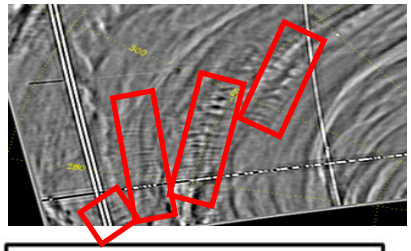

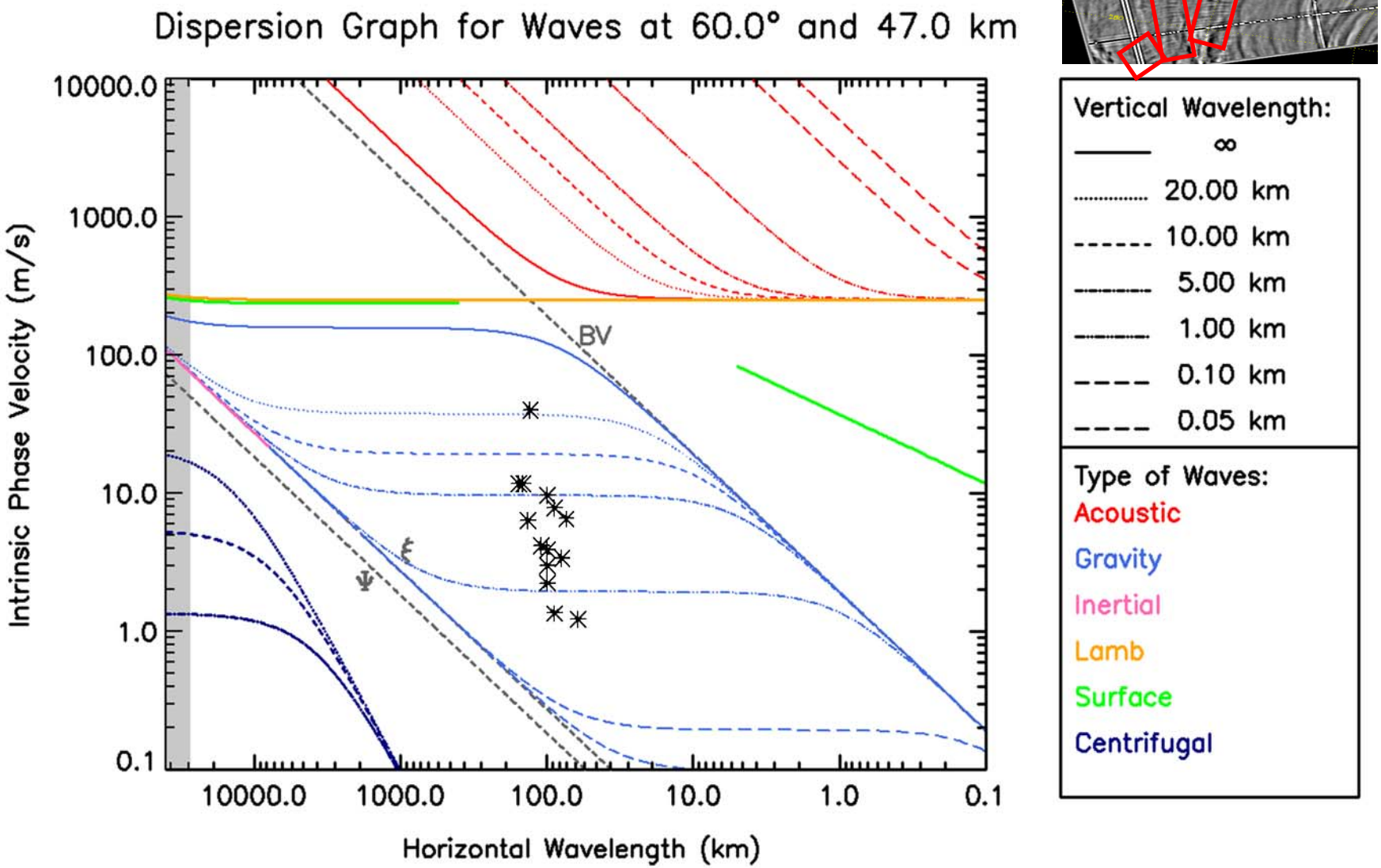

Venus's Y feature as a wind distorted wave

A new equatorially-trapped Wave for Venus

$$\frac{Du}{Dt}+\frac{1}{\rho}\frac{\partial P}{\partial x}=\frac{uv}{a}\tan\phi$$
$$\frac{Dv}{Dt}+\frac{1}{\rho}\frac{\partial P}{\partial y}=-\frac{u^2}{a}\tan\phi$$
$$\frac{Dw}{Dt}+\frac{1}{\rho}\frac{\partial P}{\partial z}=-g$$
$$\frac{\partial u}{\partial x}+\frac{\partial v}{\partial y}+\frac{\partial w}{\partial z}=0$$
$$\frac{D\Theta}{Dt}=0$$

$$\Rightarrow$$

$$\left(\frac{\partial u'}{\partial t}+u_0\frac{\partial u'}{\partial x}\right)+\frac{du_0}{dz}w'+\frac{\partial}{\partial x}\left(\frac{P'}{\rho_0}\right)=\Psi\cdot v'$$
$$\left(\frac{\partial v'}{\partial t}+u_0\frac{\partial v'}{\partial x}\right)+\frac{\partial}{\partial y}\left(\frac{P'}{\rho_0}\right)=-2\Psi\cdot u'$$
$$\left(\frac{\partial w'}{\partial t}+u_0\frac{\partial w'}{\partial x}\right)+\frac{\partial}{\partial z}\left(\frac{P'}{\rho_0}\right)=g\cdot\Theta'$$
$$\frac{\partial u'}{\partial x}+\frac{\partial v'}{\partial y}+\frac{\partial w'}{\partial z}=0$$
$$\left(\frac{\partial \Theta'}{\partial t}+u_0\frac{\partial \Theta'}{\partial x}\right)+\frac{N^2}{g}\cdot w'=0$$

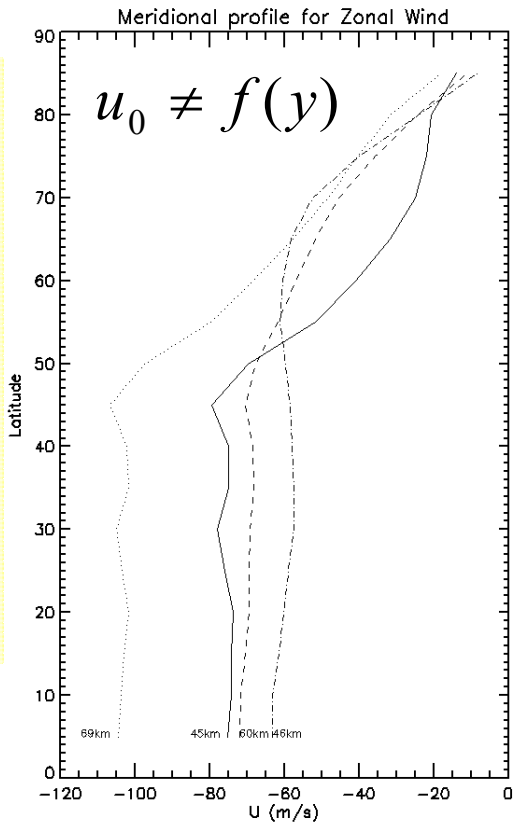

Assumptions following Matsuno (1966):

(1) Waves propagate only in the West-East direction.

(2) Centrifugal frequency at equator is null: $\Psi_0=\frac{u_0}{a}\tan\phi=0$

(3) The β-plane approximation is valid for Ψ: $\Psi\cong\beta\cdot y$

(4) Atmosphere is incompressible.

(5) Null wave amplitude for meridional component $\hat{v}=0$.

Venus's Y feature as a wind distorted wave

CC BY

Is this really a Kelvin Wave??

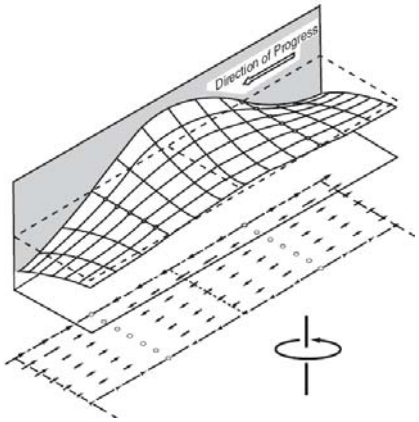

$$\hat{u} = \left(\frac{\Gamma^2}{2|\beta|} + \frac{1}{|\bar{c}_x|} \right) \cdot e^{i \cdot \pi} \cdot \frac{\hat{P}}{\rho_0} \qquad (a)$$

$$\hat{w} = \left(\frac{|\bar{\omega}|}{N^2} m \right) \cdot \frac{\hat{P}}{\rho_0} + \left(\frac{\Gamma^2}{2|\beta|} \cdot \frac{|\bar{\omega}|}{du_0/dz} \right) \cdot e^{i \cdot \frac{\pi}{2}} \cdot \frac{\hat{P}}{\rho_0} \qquad (b)$$

$$\hat{P} = \hat{P}(0, z_0) \cdot \boxed{\exp\left| -\left(\frac{\Gamma^2}{2} + \frac{|\beta|}{|\bar{c}_x|} \right) \cdot y^2 \right|} \cdot \exp\left[-\frac{\Gamma^2 N^2}{2|\beta|} \cdot \frac{(z - z_0)}{du_0/dz} \right] \cdot e^{imz} \qquad (c)$$

<u>SIMILAR to a Kelvin wave</u> because:

- Horizontally trapped about equator.

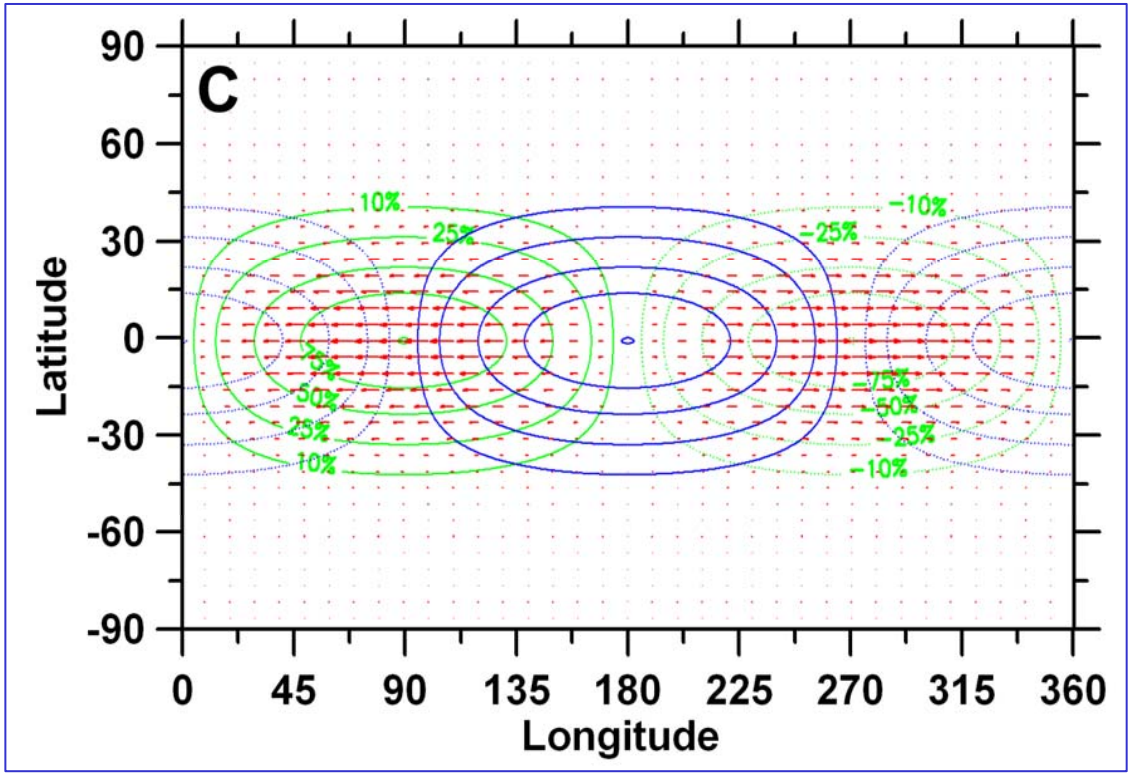

Venus's Y feature as a wind distorted wave

CC BY

Is this really a Kelvin Wave??

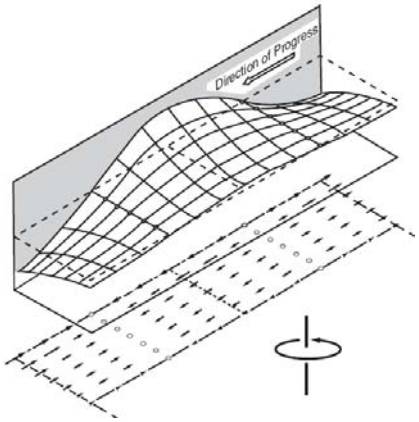

$$\hat{u} = \left(\frac{\Gamma^2}{2|\beta|} + \frac{1}{|\bar{c}_x|}\right) \cdot e^{i\cdot\pi} \cdot \frac{\hat{P}}{\rho_0} \qquad (a)$$

$$\hat{w} = \left(\frac{|\bar{\omega}|}{N^2} m\right) \cdot \frac{\hat{P}}{\rho_0} + \left(\frac{\Gamma^2}{2|\beta|} \cdot \frac{|\bar{\omega}|}{du_0/dz}\right) \cdot e^{i\cdot\frac{\pi}{2}} \cdot \frac{\hat{P}}{\rho_0} \qquad (b)$$

$$\hat{P} = \hat{P}(0, z_0) \cdot \exp\left[-\left(\frac{\Gamma^2}{2} + \frac{|\beta|}{|\bar{c}_x|}\right) \cdot y^2\right] \cdot \exp\left[-\frac{\Gamma^2 N^2}{2|\beta|} \cdot \frac{(z - z_0)}{du_0/dz}\right] \cdot e^{imz} \qquad (c)$$

<u>SIMILAR to a Kelvin wave</u> because:

- Horizontally trapped about equator.
- *u*' is phase-shifted 180º relative to *P*'.

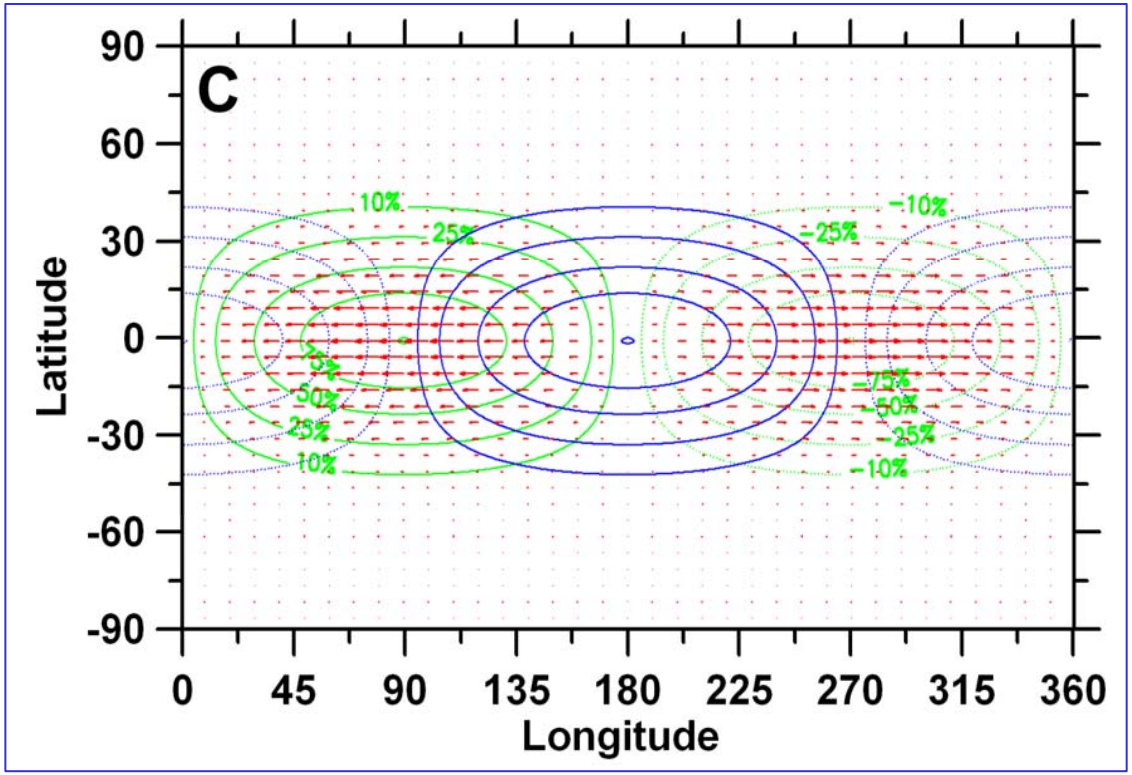

Venus's Y feature as a wind distorted wave

CC BY

Is this really a Kelvin Wave??

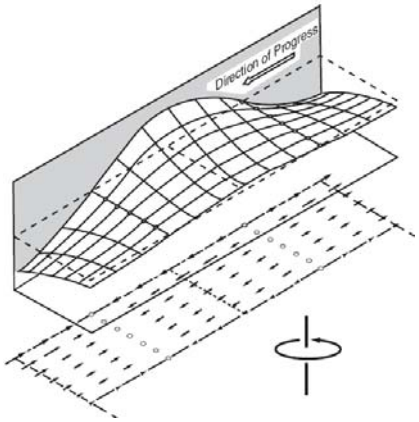

$$\hat{u} = \left(\frac{\Gamma^2}{2|\beta|} + \frac{1}{|\bar{c}_x|} \right) \cdot e^{i \cdot \pi} \cdot \frac{\hat{P}}{\rho_0} \qquad (a)$$

$$\hat{w} = \left(\frac{|\bar{\omega}|}{N^2} m \right) \cdot \frac{\hat{P}}{\rho_0} + \left(\frac{\Gamma^2}{2|\beta|} \cdot \frac{|\bar{\omega}|}{du_0/dz} \right) \cdot e^{i \cdot \frac{\pi}{2}} \cdot \frac{\hat{P}}{\rho_0} \qquad (b)$$

$$\hat{P} = \hat{P}(0, z_0) \cdot \exp\left[-\left(\frac{\Gamma^2}{2} + \frac{|\beta|}{|\bar{c}_x|} \right) \cdot y^2 \right] \cdot \exp\left[-\frac{\Gamma^2 N^2}{2|\beta|} \cdot \frac{(z - z_0)}{du_0/dz} \right] \cdot e^{imz} \qquad (c)$$

<u>SIMILAR to a Kelvin wave</u> because:

- Horizontally trapped about equator.
- *u*' is phase-shifted 180º relative to *P*'.
- Perturbations *P*' and *w*' are in phase.

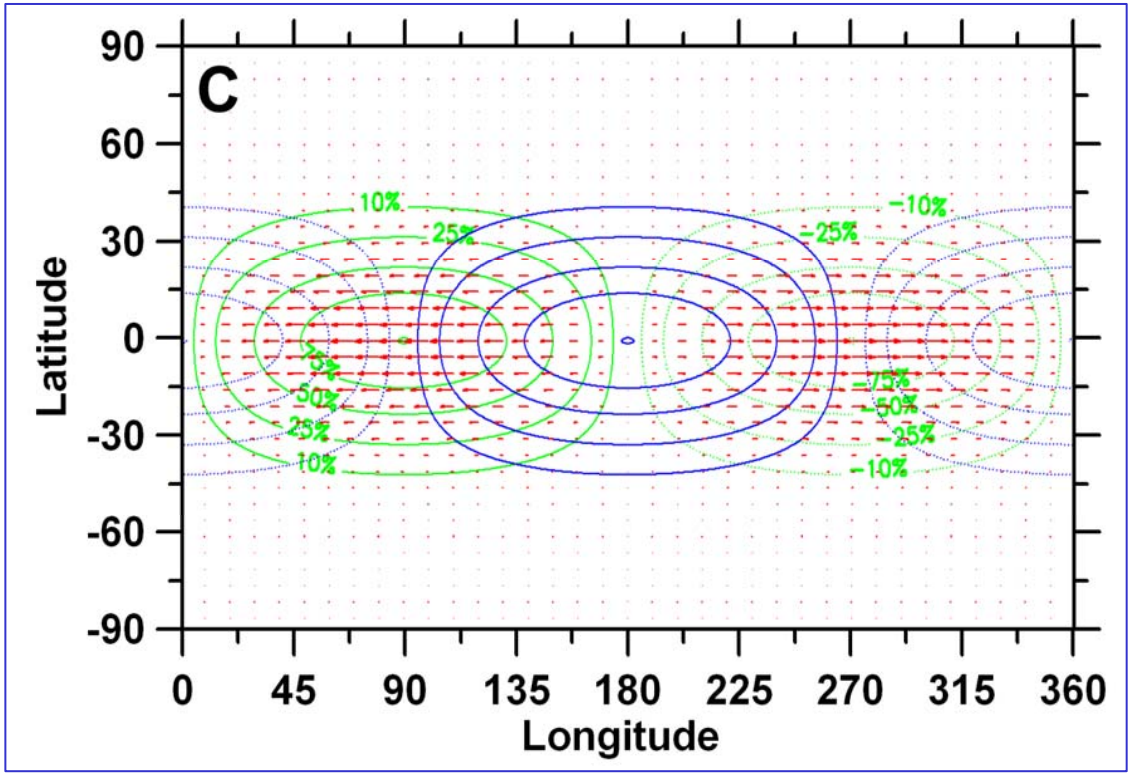

Venus's Y feature as a wind distorted wave

CC BY

Is this really a Kelvin Wave??

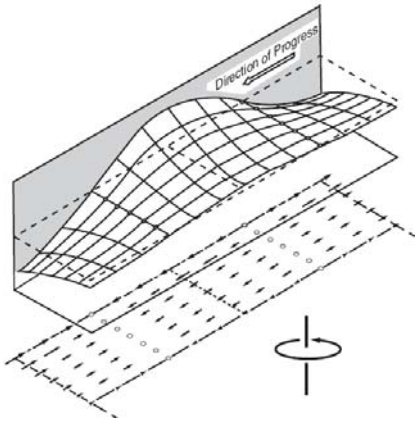

$$\hat{u} = \left(\frac{\Gamma^2}{2|\beta|} + \frac{1}{|\bar{c}_x|} \right) \cdot e^{i \cdot \pi} \cdot \frac{\hat{P}}{\rho_0} \qquad (a)$$

$$\hat{w} = \left(\frac{|\bar{\omega}|}{N^2} m \right) \cdot \frac{\hat{P}}{\rho_0} + \left(\frac{\Gamma^2}{2|\beta|} \cdot \frac{|\bar{\omega}|}{du_0/dz} \right) \cdot e^{i \cdot \frac{\pi}{2}} \cdot \frac{\hat{P}}{\rho_0} \qquad (b)$$

$$\hat{P} = \hat{P}(0, z_0) \cdot \exp\left[-\left(\frac{\Gamma^2}{2} + \frac{|\beta|}{|\bar{c}_x|} \right) \cdot y^2 \right] \cdot \exp\left[-\frac{\Gamma^2 N^2}{2|\beta|} \cdot \frac{(z - z_0)}{du_0/dz} \right] \cdot e^{imz} \qquad (c)$$

<u>SIMILAR to a Kelvin wave</u> because:

- Horizontally trapped about equator.
- *u*' is phase-shifted 180º relative to *P*'.
- Perturbations *P*' and *w*' are in phase.

<u>DIFFERENT to a Kelvin wave</u> because:

- Coriolis doesn't trap the wave.
- Vertically trapped about the local maximum of u_0.

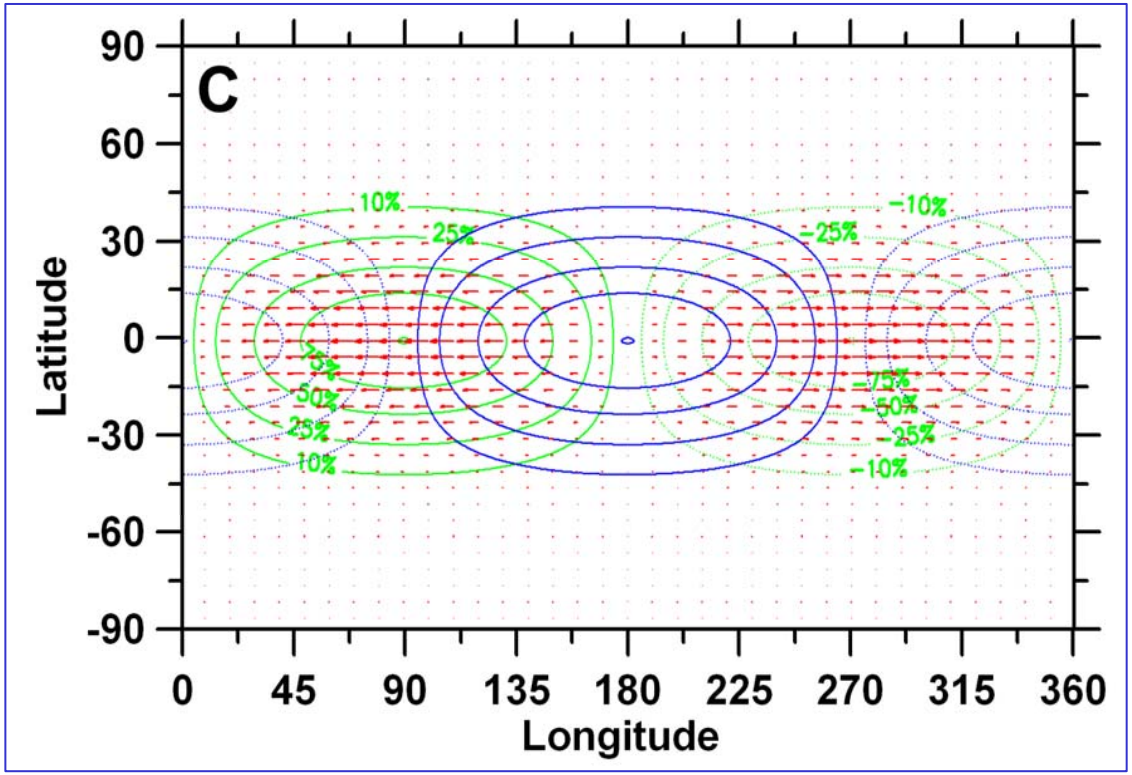

Venus's Y feature as a wind distorted wave

CC BY

Is this really a Kelvin Wave??

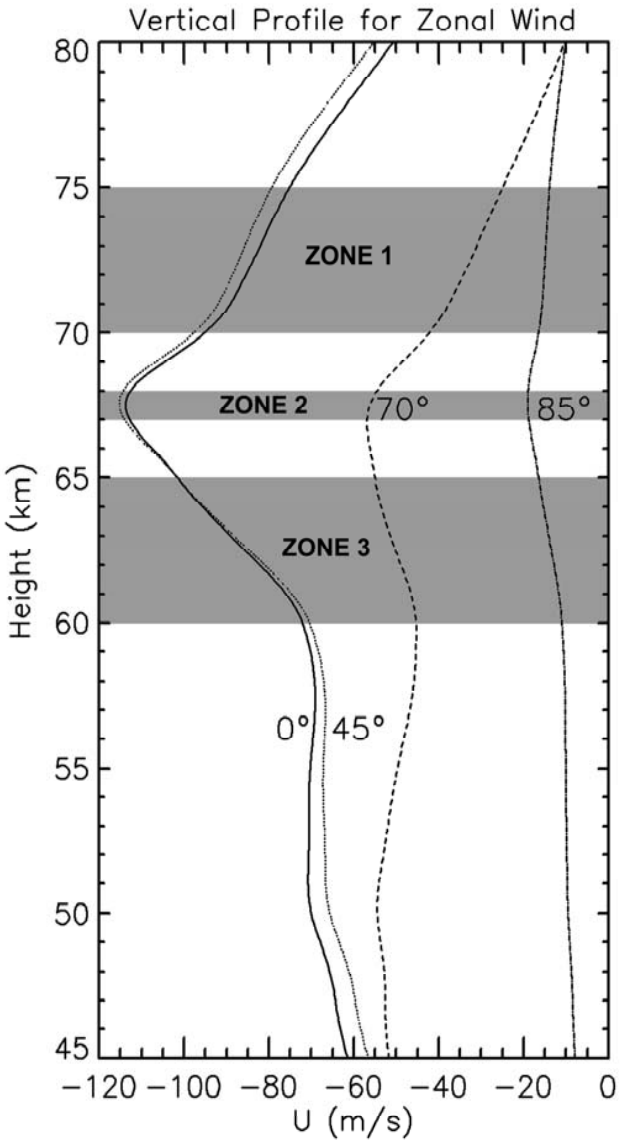

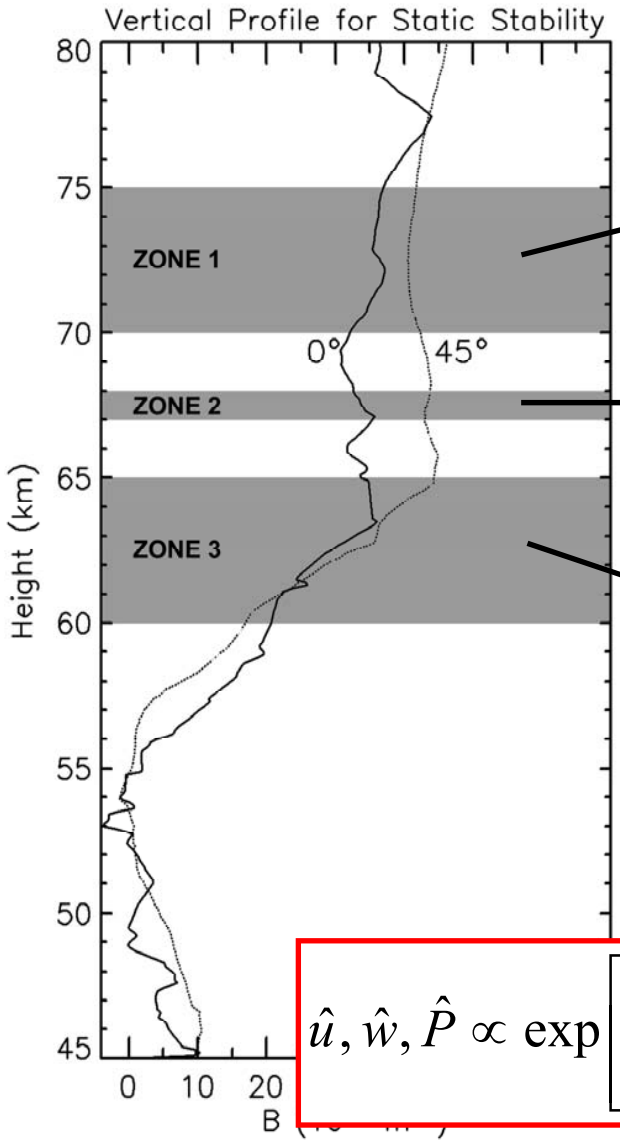

$$\frac{du_0}{dz} > 0 \;,\; \frac{dB}{dz} = 0$$

$$\frac{du_0}{dz} = 0 \;,\; \frac{dB}{dz} = 0$$

$$\frac{du_0}{dz} < 0 \;,\; \frac{dB}{dz} > 0$$

$$\overline{\omega}^2 << gB$$

$$\hat{u}, \hat{w}, \hat{P} \propto \exp\left[-\frac{\Gamma^2}{2|\beta|} \cdot \frac{g}{du_0/dz} \int_{z_0}^{z_1} dz \cdot B \right]$$

Venus's Y feature as a wind distorted wave

CC BY

Is this really a Kelvin Wave??

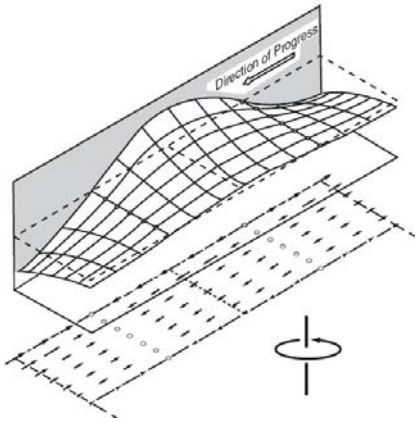

$$\hat{u} = \left(\frac{\Gamma^2}{2|\beta|} + \frac{1}{|\bar{c}_x|} \right) \cdot e^{i \cdot \pi} \cdot \frac{\hat{P}}{\rho_0} \qquad (a)$$

$$\hat{w} = \left(\frac{|\bar{\omega}|}{N^2} m \right) \cdot \frac{\hat{P}}{\rho_0} + \boxed{\left(\frac{\Gamma^2}{2|\beta|} \cdot \frac{|\bar{\omega}|}{du_0/dz} \right) \cdot e^{i \cdot \frac{\pi}{2}} \cdot \frac{\hat{P}}{\rho_0}} \qquad (b)$$

$$\hat{P} = \hat{P}(0, z_0) \cdot \exp\left[-\left(\frac{\Gamma^2}{2} + \frac{|\beta|}{|\bar{c}_x|} \right) \cdot y^2 \right] \cdot \exp\left[-\frac{\Gamma^2 N^2}{2|\beta|} \cdot \frac{(z - z_0)}{du_0/dz} \right] \cdot e^{imz} \qquad (c)$$

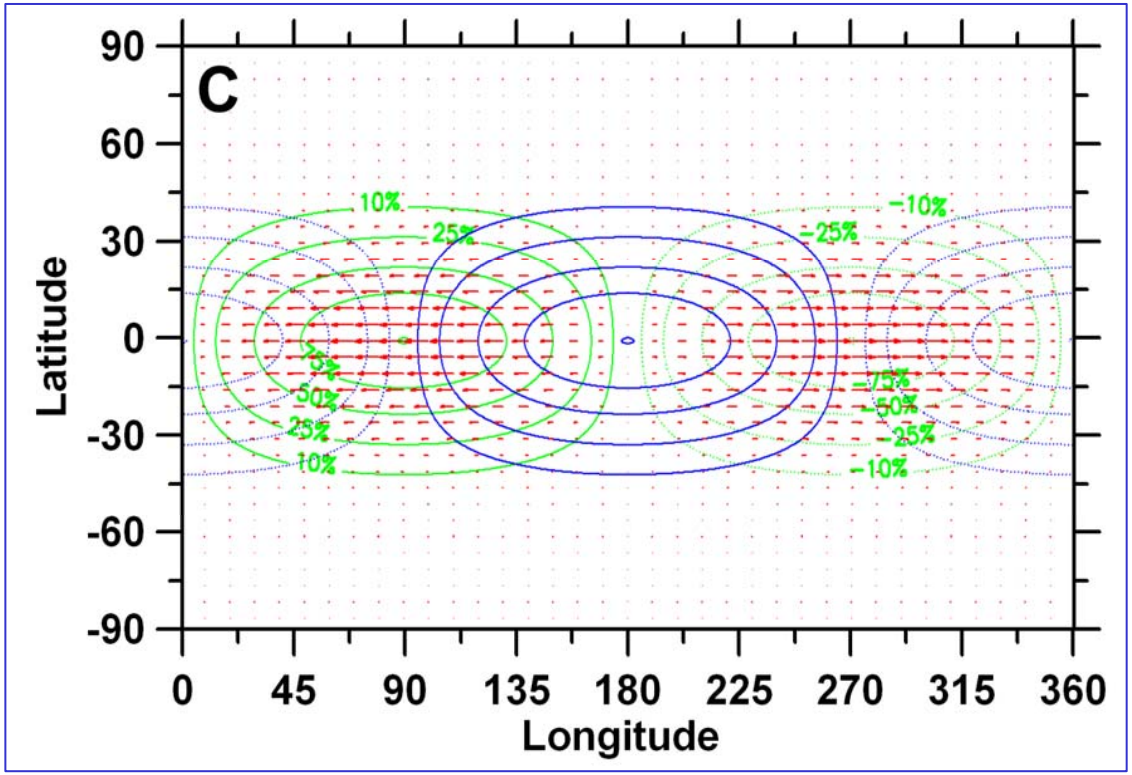

<u>SIMILAR to a Kelvin wave</u> because:

- Horizontally trapped about equator.
- *u*' is phase-shifted 180º relative to *P*'.
- Perturbations *P*' and *w*' are in phase.

<u>DIFFERENT to a Kelvin wave</u> because:

- Coriolis doesn't trap the wave.
- Vertically trapped about the local maximum of u_0.
- Propagates Westward, not Eastward.
- Component of w' phase-shifted ±90º.
- Meridional & Vertical modulations are related through the constant Γ^2.

Venus's Y feature as a wind distorted wave

CC BY

Why is the Y-feature dark?

$$\hat{u} = \frac{1}{|\beta|} \cdot \left(\frac{\Gamma^2}{2} - \frac{|\beta|}{\overline{\omega}/k_x} \right) \cdot e^{i \cdot \pi} \cdot \frac{\hat{P}}{\rho_0} \qquad (a)$$

$$\hat{w} = \left(\frac{|\overline{\omega}|}{N^2} m \right) \cdot \frac{\hat{P}}{\rho_0} + \left(\frac{\Gamma^2}{2|\beta|} \cdot \frac{|\overline{\omega}|}{du_0/dz} \right) \cdot e^{i \cdot \frac{\pi}{2}} \cdot \frac{\hat{P}}{\rho_0} \qquad (b)$$

$$\hat{P} = \hat{P}(0, z_0) \cdot \exp\left[-\left(\frac{\Gamma^2}{2} - \frac{|\beta|}{\overline{\omega}/k_x} \right) \cdot y^2 \right] \qquad (c)$$

Possible causes of the **dark markings**:

- Differences in cloud tops' altitude or Temperature *[Belton et al. 1976]*.
- Changes in Atmospheric Components:
  - Depletion of reflectors *[Yamamoto & Tanaka, 1998]*.
  - Upwelling of UV absorber *[Rossow, 1980; Del Genio et al., 1990; Titov et al. 2008]*.

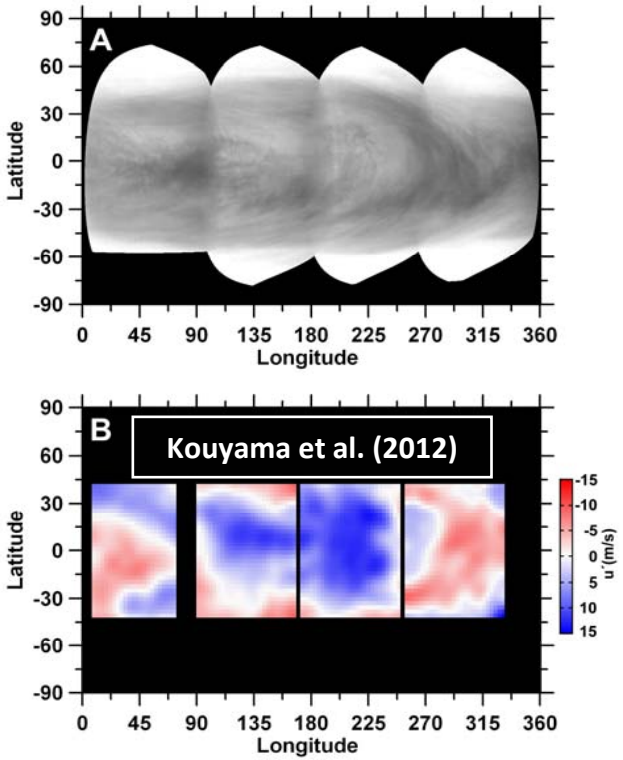

Y-feature Wave Description	Measurements (*)	Model
Period (ground-based) $\tau = 2\pi/\omega$	3.9–5.0 days	3.7 days
Zonal Wavenumber $s = k \cdot a \cdot \cos\phi$	1	1
Vertical Wavelength $\lambda_z = 2\pi/m$	—	7.6 km
Zonal velocity (z=65 km)	95 ± 2 m s^{-1}	100 m s^{-1}
Intrinsic phase speed (relative to zonal flow)	16 ± 5 m s^{-1}	23 m s^{-1}
u'	9 ± 1 m s^{-1}	10 m s^{-1}
P'	—	32.9 Pa
w'	—	$1.6 \cdot 10^{-3}$ m s^{-1}
Horizontal *e*-folding	2882 ± 427 km	2880 km
Vertical scale	—	8 km

Venus's Y feature as a wind distorted wave

CC BY

Why is the Y-feature dark?

$$\hat{u} = \frac{1}{|\beta|} \cdot \left(\frac{\Gamma^2}{2} - \frac{|\beta|}{\overline{\omega}/k_x} \right) \cdot e^{i \cdot \pi} \cdot \frac{\hat{P}}{\rho_0} \qquad (a)$$

$$\hat{w} = \left(\frac{|\overline{\omega}|}{N^2} m \right) \cdot \frac{\hat{P}}{\rho_0} + \left(\frac{\Gamma^2}{2|\beta|} \cdot \boxed{\frac{|\overline{\omega}|}{du_0/dz}} \right) \cdot e^{i \cdot \frac{\pi}{2}} \cdot \frac{\hat{P}}{\rho_0} \qquad (b)$$

$$\hat{P} = \hat{P}(0, z_0) \cdot \exp\left[-\left(\frac{\Gamma^2}{2} - \frac{|\beta|}{\overline{\omega}/k_x} \right) \cdot y^2 \right] \qquad (c)$$

Possible causes of the **dark markings**:

- Differences in cloud tops' altitude or Temperature *[Belton et al. 1976]*.
- Changes in Atmospheric Components:
  - Depletion of reflectors *[Yamamoto & Tanaka, 1998]*.
  - Upwelling of UV absorber *[Rossow, 1980; Del Genio et al., 1990; Titov et al. 2008]*.

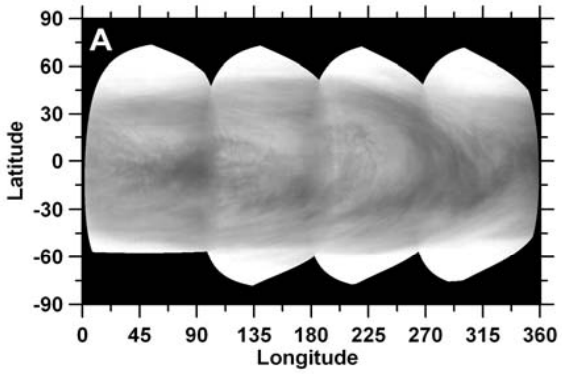

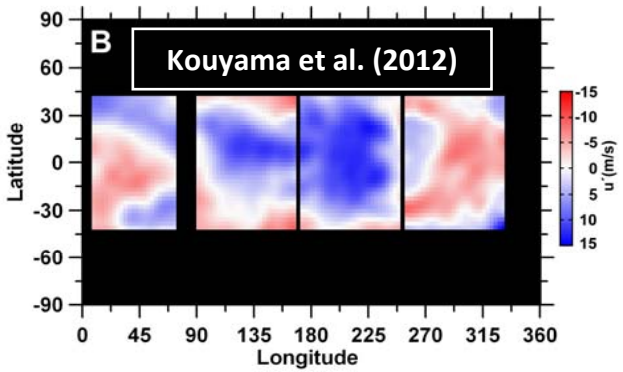

Y-feature Wave Description	Measurements (*)	Model
Period (ground-based) $\tau = 2\pi/\omega$	3.9–5.0 days	3.7 days
Zonal Wavenumber $s = k \cdot a \cdot \cos\phi$	1	1
Vertical Wavelength $\lambda_z = 2\pi/m$	—	7.6 km
Zonal velocity (z=65 km)	95 ± 2 m s^{-1}	100 m s^{-1}
Intrinsic phase speed (relative to zonal flow)	16 ± 5 m s^{-1}	23 m s^{-1}
u'	9 ± 1 m s^{-1}	10 m s^{-1}
P'	—	32.9 Pa
w'	—	$1.6 \cdot 10^{-3}$ m s^{-1}
Horizontal *e*-folding	2882 ± 427 km	2880 km
Vertical scale	—	8 km

UV absorber shoots up at $z=z_0$ and it is lagged by the strength atmospheric diffusion *[Del Genio et al. 1990]*

Venus's Y feature as a wind distorted wave

CC BY

The Y-feature as a distorted wave

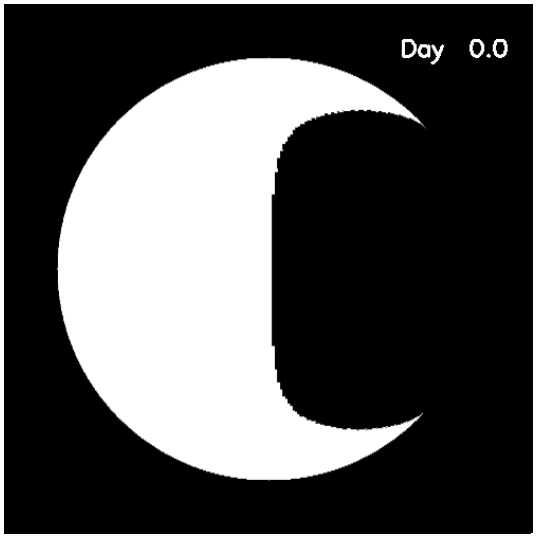

- The "Y" shape is the result of the phase deformation due to the non-solid-body rotation of Venus winds.

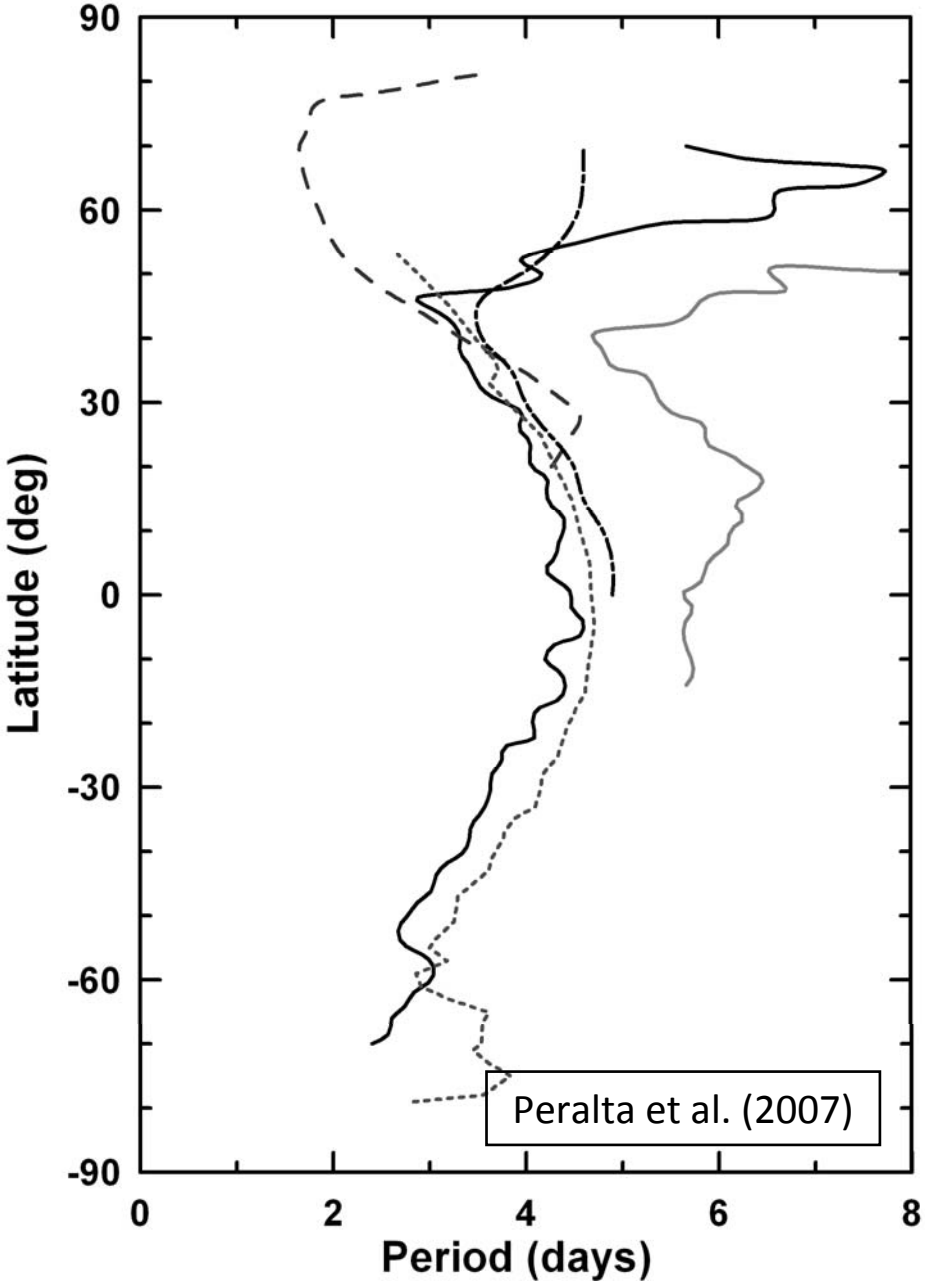

Venus's Y feature as a wind distorted wave

CC BY

The Y-feature as a distorted wave

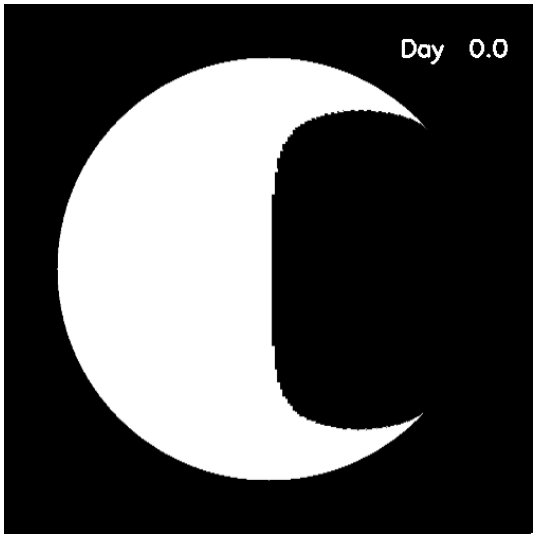

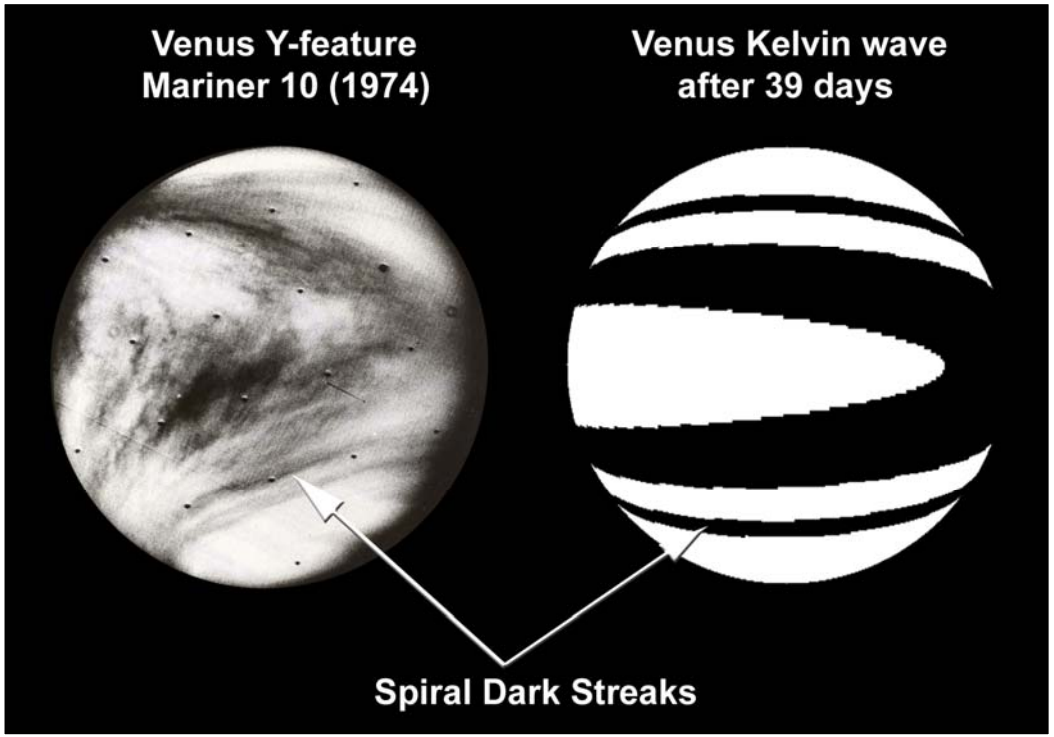

- The "Y" shape is the result of the phase deformation due to the non-solid-body rotation of Venus winds.
- Spiral dark streaks can be explained as faster phase speed at high latitudes.

Venus's Y feature as a wind distorted wave

CC BY

The Y-feature as a distorted wave

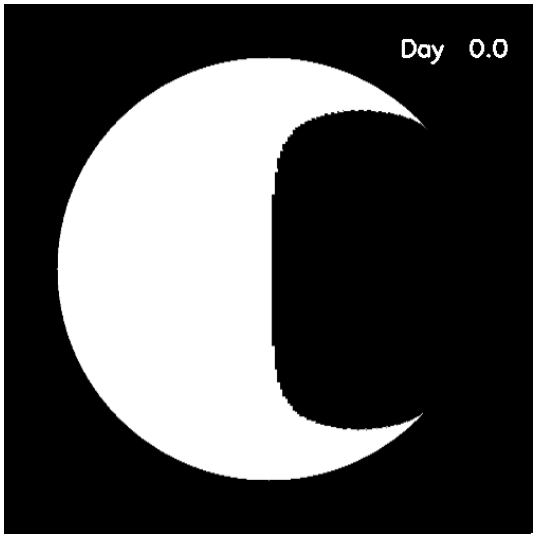

- The "Y" shape is the result of the phase deformation due to the non-solid-body rotation of Venus winds.
- Spiral dark streaks can be explained as faster phase speed at high latitudes.
- We reproduce Pioneer Venus observations for 30 days!

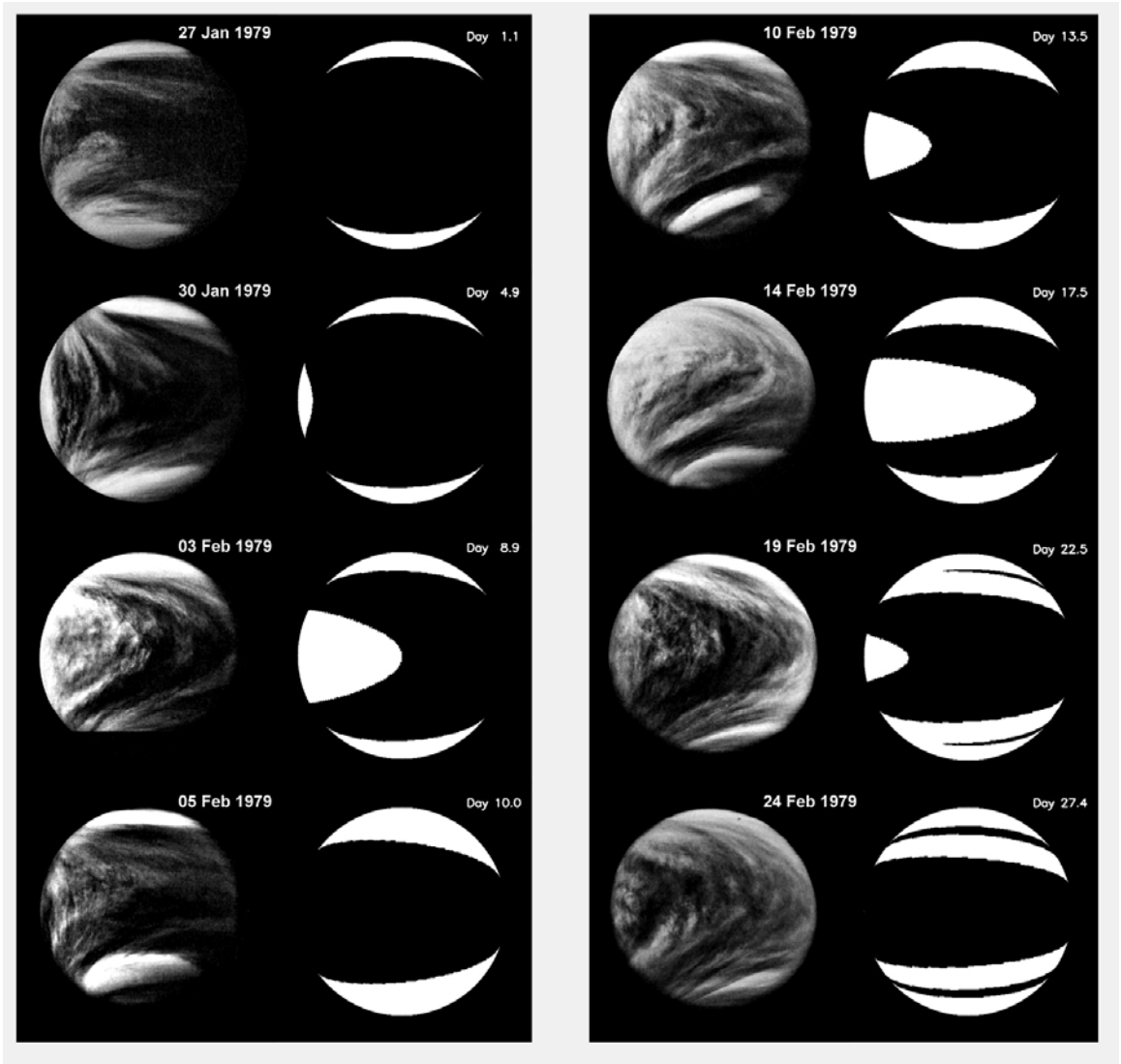

Venus's Y feature as a wind distorted wave

CC BY

Conclusions:

- We deduced a new equatorially-trapped wave suitable for the cyclostrophic conditions of the Venus atmosphere.
- This wave propagates Westward along the equator and is vertically trapped about the level where zonal wind peaks.
- The "Y" shape is the result of the phase deformation due to the non-solid-body rotation of Venus winds. This is supported by excellent agreement with PV images.
- Vertical velocity perturbations can account for the upwelling of UV absorber.

- FUTURE: include meridional circulation, convection, sources of wave excitation, a 5-day mode at mid-latitudes, …

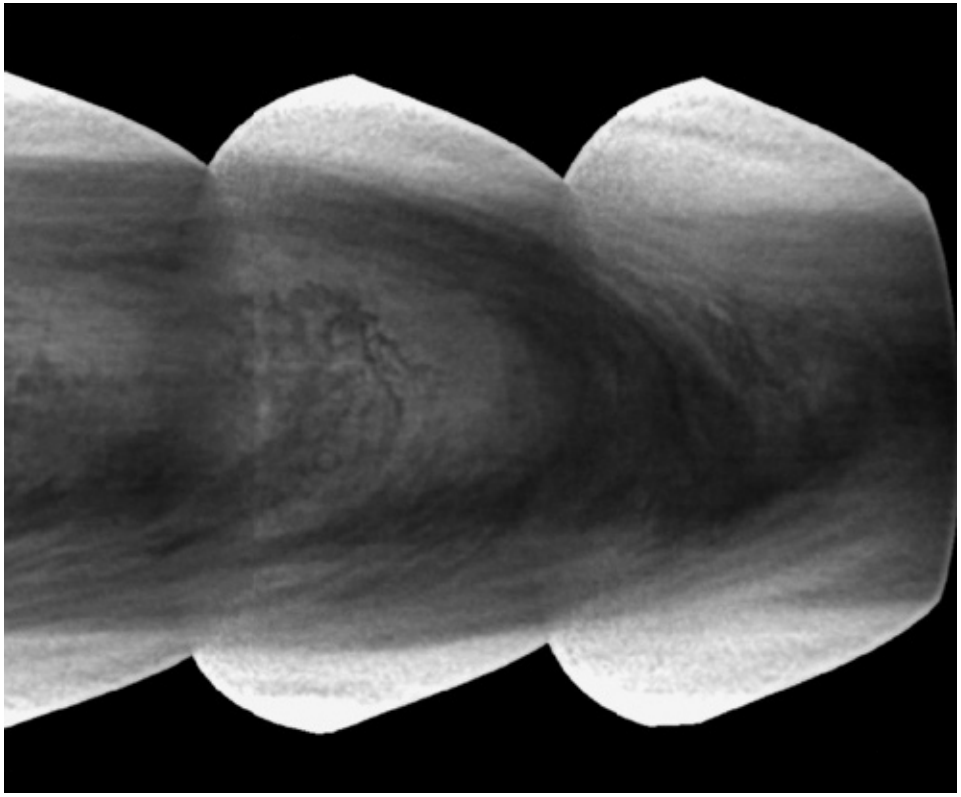

Thank you very much for your attention !!